This is the cut pages sample. Download all 10 page(s) at: ManualPlace.com
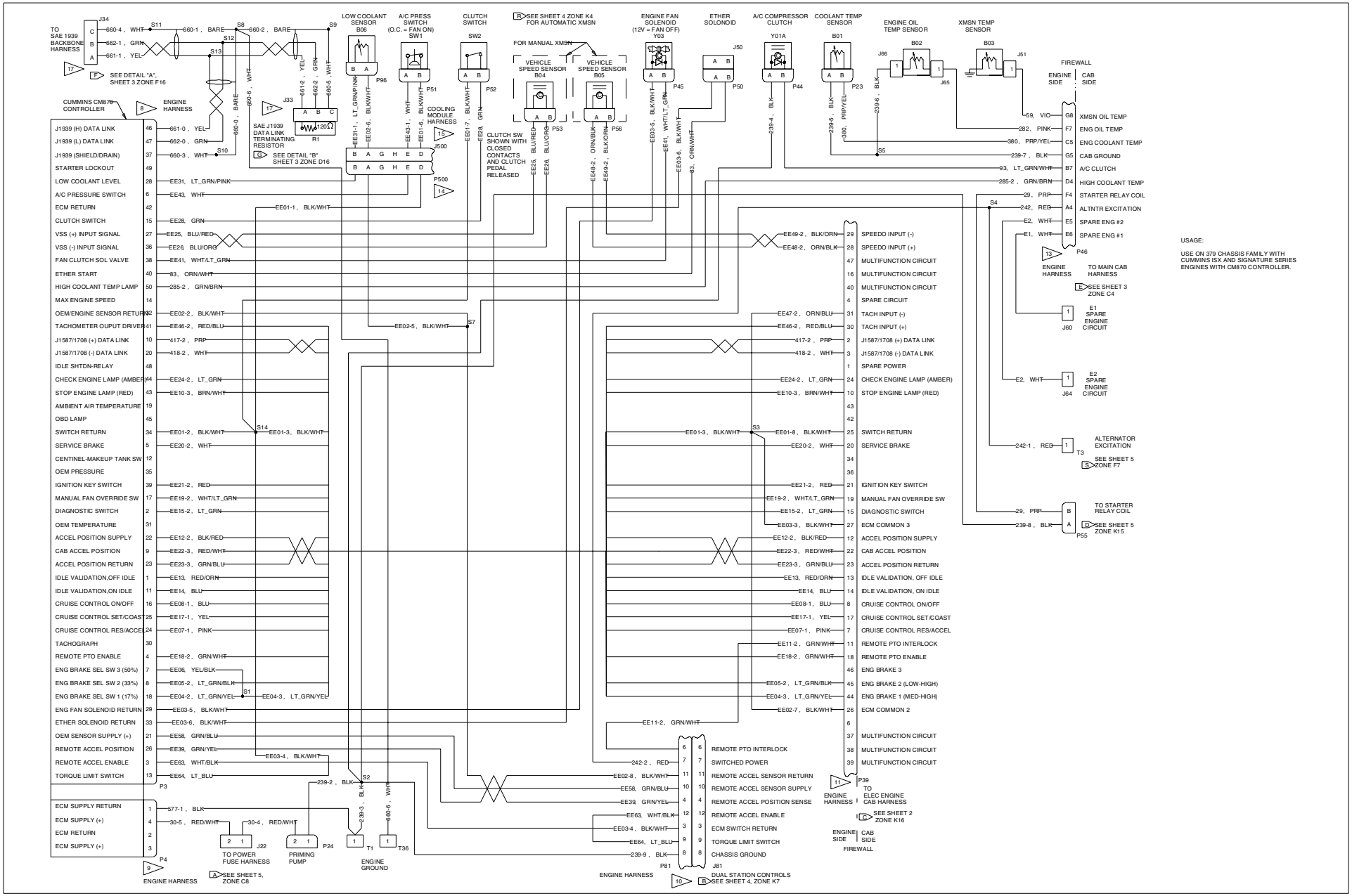
Peterbilt Pb379 Diagram System Cummins Isx P94 6002
Full download: http://manualplace.com/download/peterbilt-pb379-diagram-system-cummins-isx-p94-6002/