Perkins

Diesel Engines Model Nos:

499
4107
4108

Documents reprinted 1972

Contents

Index to Engine Photographs

1. Fresh Water Filler Cap.
2. Header Tank.
3. Oil Filler.
4. Air Filter.
5. Fuel Injection Pump.
6. Atomiser Leak off Pipe.
7. Pressure pipes, Injection Pump to Atomisers.
8. Atomiser.
9. Fuel Pipes, Filter to Injection Pump.
10. Exhaust Manifold.
11. Ahead and Astern Engagement Lever.
12. Gearbox Oil Filter.
13. Reduction Gearbox Oil Filler.
14. Output Flange.
15. Rear Engine Support.
16. Water Pipe, Gearbox to Sea Water Pump.
17. Lubricating Oil Filter.
18. Connection for Oil Sump Pump.*
    *Where a "Z" Drive Transom unit is fitted, the sump drain pump is connected to the dipstick tube.
19. Sump.
20. Oil Cooler Pipes.
21. Front Engine Support.
22. Crankshaft Pulley.
23. Sea Water Pump.
24. Water Pipe Exhaust Manifold to Cylinder Block.
25. Fresh Water Pump.
26. Gearbox Pressure Gauge Connection.
27. Rear Lifting Eye.
28. Flywheel Housing.
29. Cylinder Head Cover.
30. Fuel Filter.
31. Breather Pipe.
32. Fuel Lift Pump.
33. Induction Manifold.
34. Cold Starting Aid.
35. Front Lifting Eye.
36. Sea Water Outlet Connection.
37. Engine Oil Cooler.
38. Dynamo Driving Belt.
39. Dynamo.
40. Tappet Inspection Cover.
41. Tachometer Drive.
42. Dipstick.
43. Starter Motor.
44. Gearbox Dipstick.
45. Gearbox Water Drain Plug.
46. Reduction Gearbox Oil Level Plug.
47. Gearbox Water Inlet Connection.
48. Gearbox Water Outlet Connection.
49. Heat Exchanger.
50. Alternator.
51. Sump Drain Pump.

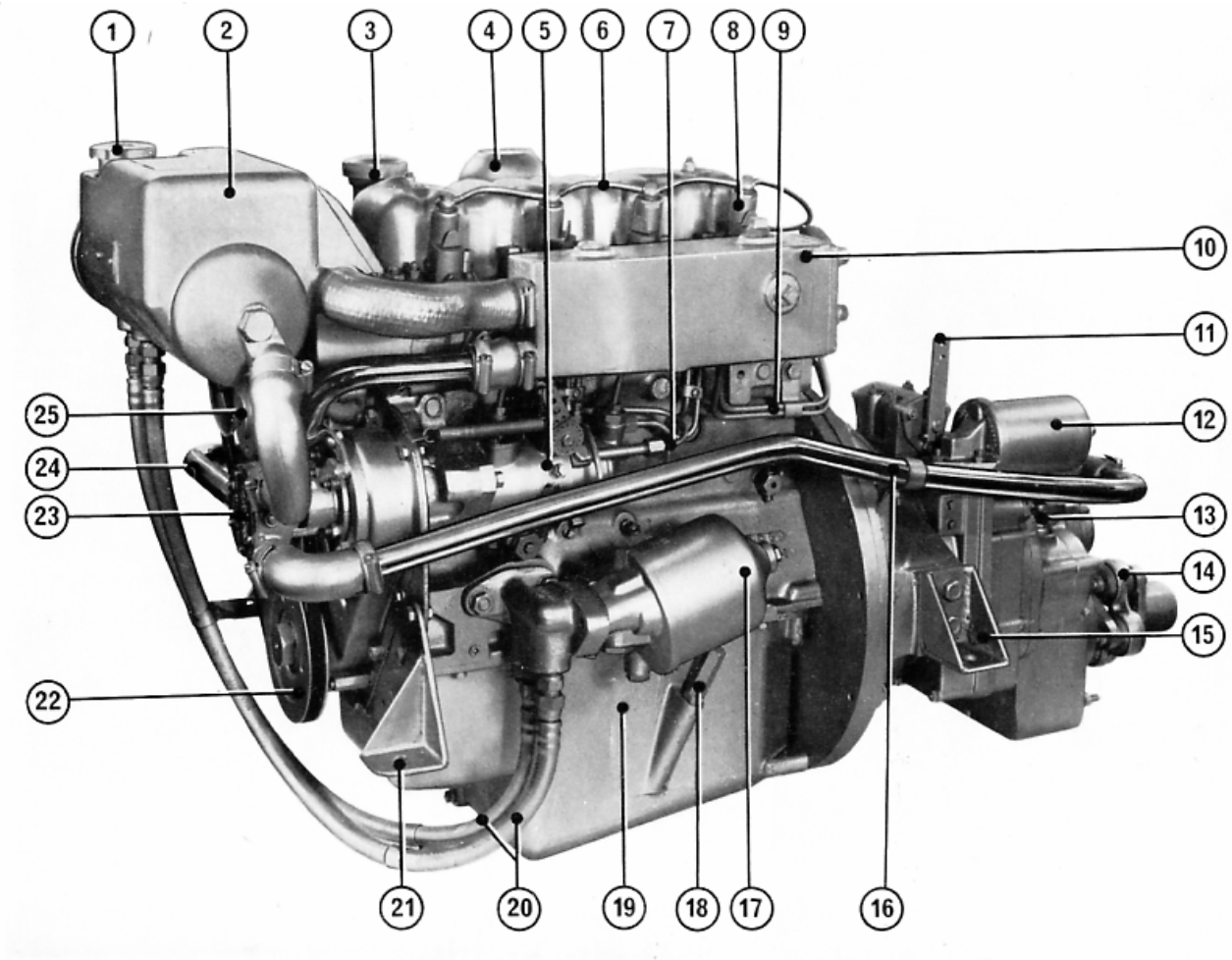

View of Fuel Pump side of Engine.

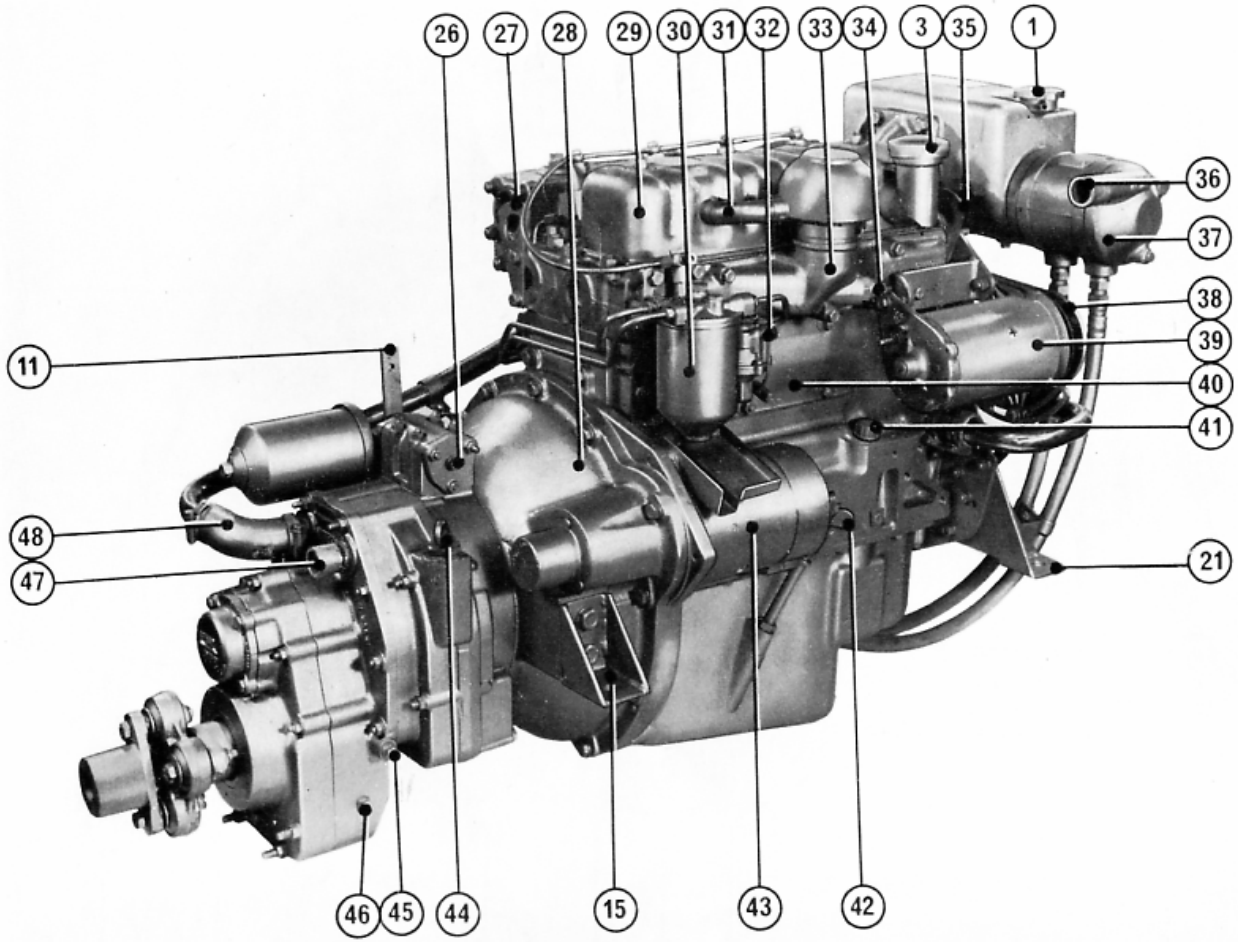

View of Camshaft side of Engine.

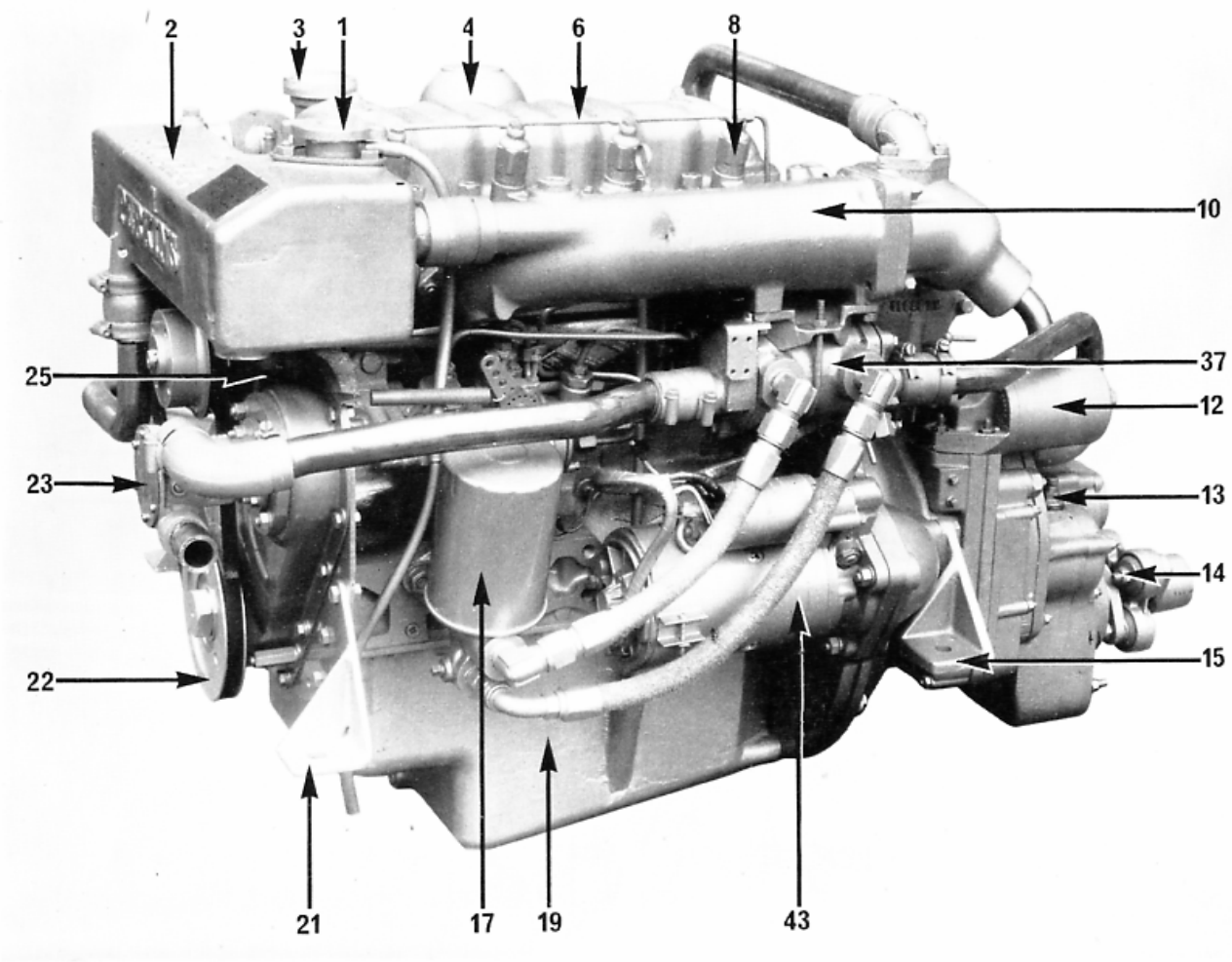

View of Fuel Pump Side of Low-Line Engine.

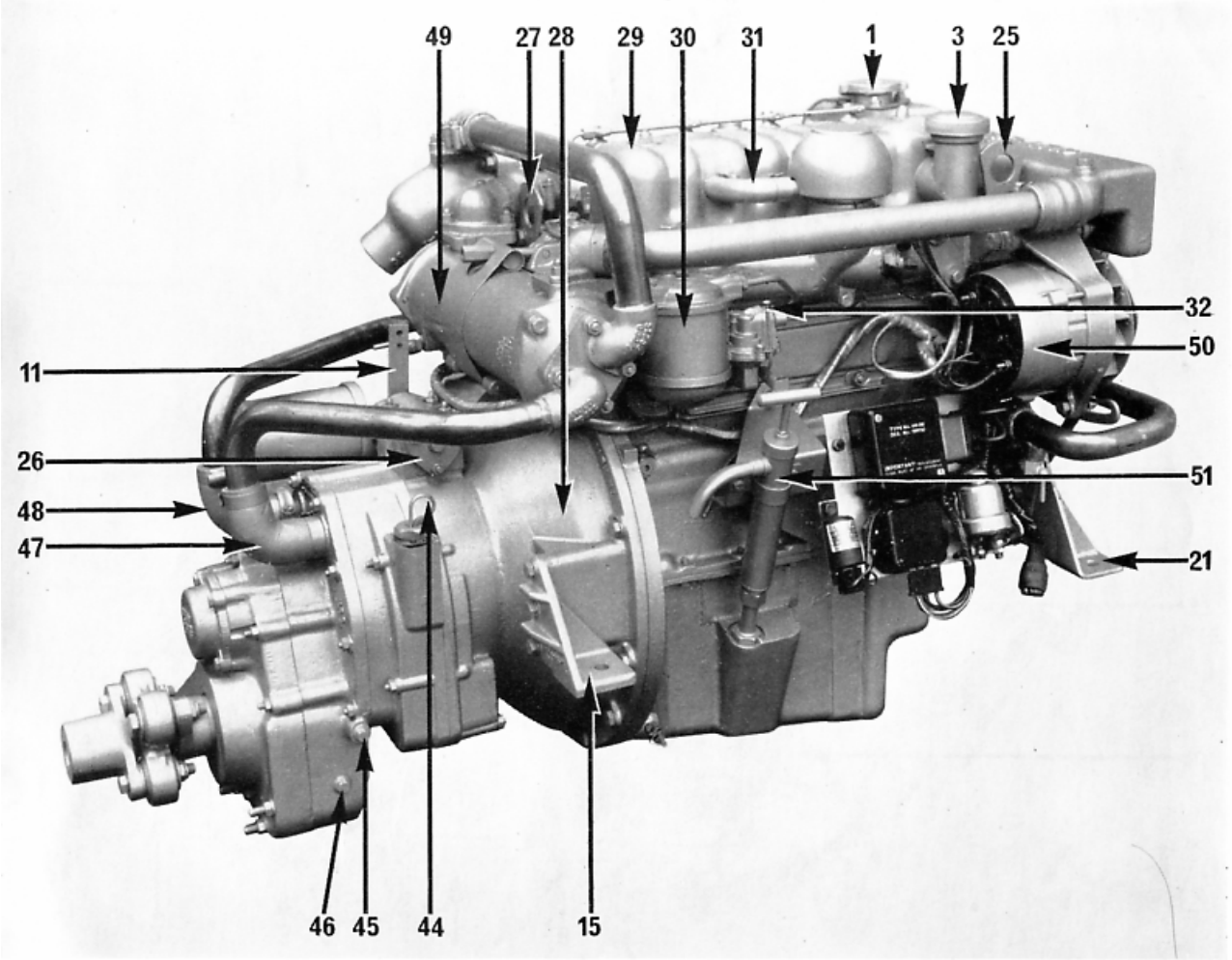

View of Camshaft Side of Low-Line Engine.

Connecting Rods

The connecting rods are in high tensile steel with an "H" Section Shank.

The big end facing is inclined at 45° to the axis of the rod, and is serrated for cap location, the cap being secured by two setscrews.

Pre-finished big-end bearings and lead bronze small end bushes are fitted.

Lubricating System

A rotary type oil pump, located in the sump, is driven by spiral gears from the camshaft.

An oil strainer, located in the sump, is provided at the pump suction inlet.

The oil is delivered through a full-flow filter on the left hand side of the engine to a main gallery drilled lengthwise through the crankcase. The lubricating oil filter is fitted horizontally, and incorporates a by-pass relief valve.

Drilled holes through the main bearing housings carry the oil from the main gallery to the main bearings, from whence it passes via drilled holes in the crankshaft to the big end bearings.

Drillings in the crankcase webs feed oil from the main bearings to the camshaft bearings. A supply of oil at reduced pressure is fed to the rocker levers from the centre camshaft bearing.

The cylinder bores, small end bush and gudgeon pins are lubricated by splash from the big end bearings.

An oil relief valve is provided in the lub. oil pump body, to control the maximum oil pressure.

The oil filler is mounted on the cylinder head cover.

The oil level dipstick is located on the right hand side of the engine, but provision is made for fitting on the left hand side of the engine if required.

A tapping is provided in the main oil gallery, whereby a pressure warning switch or a pressure gauge may be connected.

Lubricating Oil Sump

A cast aluminium lubricating oil sump is fitted with the drain plug at the front and if required a sump drain pump can be fitted.

Crankcase Ventilation

A closed type breather pipe is fitted from the rocker cover to the air intake and the air movement assists in drawing fumes from the crankcase.

Fuel Injection Equipment

A distributor type fuel pump is flange mounted on the left hand side of the cylinder block, and driven through a splined shaft.

An automatic device is incorporated in the fuel pump to advance or retard the point of fuel injection according to changes of engine speed, for variable speed engines.

The engine speed is controlled by a hydraulic type governor incorporated in the fuel pump, the speed control lever being located on the fuel pump together with an engine stop lever.

A fuel lift pump of the diaphragm type and equipped for hand priming is fitted on the tappet cover on the right hand side of the engine. The pump is operated by an eccentric from the camshaft, via a small push rod.

The atomisers are located on the left hand side of the cylinder head in an accessible position. They are retained in the head by flanges secured with nuts.

A fuel filter is mounted on the right hand side of the cylinder block. The filter is of the paper element type.

Induction Manifold

The induction manifold is made of die-cast aluminium, on the right hand side of the cylinder head, and an air filter is fitted on this manifold.

Exhaust Manifold

A water cooled exhaust manifold is fitted to the left hand side of the cylinder head. The water is not in direct contact with the exhaust gases but circulates in an outer jacket forming part of the engine cooling system.

Cooling System

Two methods of cooling are available according to customer's requirements.

1. Open Circuit Cooling

In this system sea or river water is drawn through a suitable sea cock by a rubber impeller type pump, circulated round the engine and discharged into the sea or river.

2. Closed Circuit Cooling

In this system fresh water is circulated round the engine by a centrifugal type water pump and this water is in turn cooled by either keel cooling pipes or a heat exchanger.

Electrical Equipment

Twelve volt electrical equipment is fitted to the engine.

The dynamo or alternator is mounted on the right hand side of the engine, and is belt driven from the front end of the crankshaft. Belt tension is adjusted by means of a slotted link.

The flange mounted starter motor is fitted on the right hand side of the engine.

Starting Aids

To aid starting under cold conditions, a "Thermostart" heater is fitted in the induction manifold.

Tachometer Drive

Provision is made, on the right hand side of the engine, for a drive at half engine speed to be taken from the oil pump spiral gear to a tachometer.