Manitou Mvt660 Part Catalog
Full download: http://manualplace.com/download/manitou-mvt660-part-catalog/

547065

MVT 660

This is the cut pages sample. Download all 304 page(s) at: ManualPlace.com

Ref.547065

MANITOU

COSTRUZIONI IDUSTRIALI
VIA E.FERMI 5
41013 CASTELFRANCO EMILIA
MODENA ITALIA
TEL. +39 (0)59/923107

MVT 660

MOTORE 1004.4

CATALOGO RICAMBI
CATALOGUE PIECES
PARTS CATALOGUE
ERSATZTEILKATALOG

1a DATA DI PUBBLICAZIONE 1ére DATE D'EDITION 04/1995
1st DAT PUBLICATION 1st DATUM AUSGABE

INFORMAZIONI CATALOGO INFORMATION CATALOGUE CATALOGUE INFORMATION KATALOG	DATA DI PUBBLICAZIONE DATE D'EDITION DATE PUBLICATION DATUM AUSGABE	OSSERVAZIONI OBSERVATION OBSERVATION BEMERKUNG
	04/1995	-1a edizione -1ére édition -1st publication -1st ausgabe

I N D E X

TAVOLA - PLANCHE DRAWING - SEITE	DESCRIZIONE	DESIGNATION	DESCRIPTION	BEZEICHNUNG
1	RUOTE	ROUES	WHEELS	RAD
2	RAFFRED.MOTORE,CIRCUITO ASPIRAZ. E SCARICO	ADAPTATION MOTEUR-TRANSMISSION	ENGINE-TRANSMISSION ADAPTATION	MOTOR-GRTRIEBE ANPASSUNG
3	PORTAFORCHE	TABLIER	FORK CARRIAGE	GABEL TRAGER
3 - (T.U.V.)	PORTAFORCHE	TABLIER	FORK CARRIAGE	GABEL TRAGER
4	BRACCIO TELESCOPICO	BRAS TELESCOPIQUE	TELESCOPIC BOOM	TELESKOPAUSLEGER
5	CARROZZERIA-TELAIO	CARROSSERIE-CHASSIS	BODY-FRAME	KAROSSERIE-GESTELL
5 - (T.U.V.)	CARROZZERIA-TELAIO	CARROSSERIE-CHASSIS	BODY-FRAME	KAROSSERIE-GESTELL
6	CABINA (Particolari)	CABINE (Details)	CAB (Details)	KABINE (Einzelteile)
6 - 1	CABINA (Particolari)	CABINE (Details)	CAB (Details)	KABINE (Einzelteile)
6 - 2	CABINA (Particolari)	CABINE (Details)	CAB (Details)	KABINE (Einzelteile)
6 - 3	CABINA (Particolari)	CABINE (Details)	CAB (Details)	KABINE (Einzelteile)
6 - 3 (T.U.V.)	CABINA (Particolari)	CABINE (Details)	CAB (Details)	KABINE (Einzelteile)
6 - 4	CABINA (Particolari)	CABINE (Details)	CAB (Details)	KABINE (Einzelteile)
6 - 5	CABINA (Particolari)	CABINE (Details)	CAB (Details)	KABINE (Einzelteile)
6 - 6	CABINA (Particolari)	CABINE (Details)	CAB (Details)	KABINE (Einzelteile)
7	LEVE E COMANDI	TRINGLERIE	LEVER AND LINKAGE	HEBEL UND KOMMANDE

I N D E X

TAVOLA - PLANCHE DRAWING - SEITE	DESCRIZIONE	DESIGNATION	DESCRIPTION	BEZEICHNUNG
8	MONTAGGIO MOTORE E TRASMISSIONE IDROSTATICA	CIRCUIT TRANSMISSION HYDROSTATIQUE	HYDROSTATIC TRANSMISSION CIRCUIT	HYDROSTATIK GETRIEBEKREIS
9	TRASMISSIONE IDROSTATICA	CIRCUIT TRANSMISSION HYDROSTATIQUE	HYDROSTATIC TRANSMISSION CIRCUIT	HYDROSTATIK GETRIEBEKREIS
10	IMPIANTO IDRAULICO (Circuito principale)	HYDRAULIQUE (Circuit principal)	HYDRAULIC (Principal circuit)	HYDRAULIK (Hauptkreis)
11	IMPIANTO IDRAULICO (Sollevamento - sfilo)	HYDRAULIQUE (Circuit levage - telescopage)	HYDRAULIC (Lifting - telescope circuit)	HYDRAULIK (Aufwinden-zusammenstroll kreis)
12	IMPIANTO IDRAULICO (Compensazione - brandeggio)	HYDRAULIQUE (Circuit compensation-inclinasion fourche)	HYDRAULIC (Compensation - tilting)	HYDRAULIK (Kompensation - neige)
13	IMPIANTO IDRAULICO (Circuito sterzo e ventola)	HYDRAULIQUE (Circuit direction et ventilateur)	HYDRAULIC (Steering circuit and fen)	HYDRAULIK (Lenkungkreis und lüfter)
14	IMPIANTO IDRAULICO FRENANTE E ACCELERATORE	CIRCUIT FREINAGE ET ACCELERATEUR	BRAKES CIRCUIT AND ACCELERATOR	BREMSEKREIS UND GASSYSTEM
15	CILINDRO DI SOLLEVAMENTO	VERIN DE LEVAGE	LIFTING CYLINDER	AUFWINDEN ZYLINDER
16	CILINDRO SFILO	VERIN TELESCOPAGE	TELESCOPE CYLINDER	ZUSAMMENSTROLL ZYLINDER
17	CILINDRO DI BRANDEGGIO	VERIN D'INCLINASION	TILT CYLINDER	NEIGEZYLINDER
18	CILINDRO DI COMPENSAZIONE	VERIN DE COMPENSATION	COMPENSATION CYLINDER	KOMPENSATION ZYLINDER
19	DISTRIBUTORE	DISTRIBUTEUR	CONTROL VALVE	STEUERBLOCK

INDEX

TAVOLA - PLANCHE DRAWING - SEITE	DESCRIZIONE	DESIGNATION	DESCRIPTION	BEZEICHNUNG
19 - 1	DISTRIBUTORE (Gruppo comando)	DISTRIBUTEUR (Groupe commande)	CONTROL VALVE (Control group)	STEUERBLOCK (Steuerungruppe)
19 - 2	DISTRIBUTORE (Valvola)	DISTRIBUTEUR (Soupape)	CONTROL VALVE (Valve)	STEUERBLOCK (Ventil)
19 - 3	DISTRIBUTORE (Valvola)	DISTRIBUTEUR (Soupape)	CONTROL VALVE (Valve)	STEUERBLOCK (Ventil)
19 - 4	DISTRIBUTORE (Valvola)	DISTRIBUTEUR (Soupape)	CONTROL VALVE (Valve)	STEUERBLOCK (Ventil)
19 - 5	DISTRIBUTORE (Valvola)	DISTRIBUTEUR (Soupape)	CONTROL VALVE (Valve)	STEUERBLOCK (Ventil)
19 - 6	DISTRIBUTORE (Gruppo V.N.R.)	DISTRIBUTEUR (Groupe V.N.R.)	CONTROL VALVE (V.N.R. group)	STEUERBLOCK (V.N.R. gruppe)
19 - 7	DISTRIBUTORE (Gruppo tappo)	DISTRIBUTEUR (Groupe bouchon)	CONTROL VALVE (Plug group)	STEUERBLOCK (Stopfen gruppe
19 - 8	DISTRIBUTORE (Gruppo tiranti)	DISTRIBUTEUR (Jeau tirant)	CONTROL VALVE (Tie rod kit)	STEUERBLOCK (Spannstangesatz)
19 - 9	DISTRIBUTORE (Guarnizioni elementi)	DISTRIBUTEUR (Kit joints)	CONTROL VALVE (Seal kit)	STEUERBLOCK (Dichtungssatz)
20	DISTRIBUTORE STERZO	DISTRIBUTEUR DE DIRECTION	STEERING VALVE BANK	KOMMANDOSTEUERVENTIL
21	ELETTROVALVOLA DI SICUREZZA	ELECTROVALVE DE SECURITE	SAFETY SYSTEM ELECTROVALVE	SICHERHEITELEKTROVENTIL
22	DISPOSITIVO DI SICUREZZA	SISTEME DE SECURITE	SAFETY SYSTEM	SICHERHEITSVORRICHTUNG
23	RISCALDAMENTO	CIRCUIT CHAUFFAGE	HEATING CIRCUIT	ERHITZENKREIS
24 - 1	ELETTRICITA' (Dettagli)	ELECTRICITE (Détails)	ELECTRICITY (Details)	ELEKTRIZITAT (Einzelteile)
24 - 1 (T.U.V.)	ELETTRICITA' (Dettagli)	ELECTRICITE (Détails)	ELECTRICITY (Details)	ELEKTRIZITAT (Einzelteile)
24 - 2	ELETTRICITA' (Dettagli)	ELECTRICITE (Détails)	ELECTRICITY (Details)	ELEKTRIZITAT (Einzelteile)
25	ELETTRICITA' (Cruscotto strumenti)	ELECTRICITE (Tableau de bord)	ELECTRICITY (Instrument panel)	ELEKTRIZITAT (Instrumentenbre

I N D E X

TAVOLA - PLANCHE DRAWING - SEITE	DESCRIZIONE	DESIGNATION	DESCRIPTION	BEZEICHNUNG
26	TARGHETTE ADESIVE	ADHESIFS	ADHESIVE	KLEBSTOFF
27	TARGHETTE ADESIVE	ADHESIFS	ADHESIVE	KLEBSTOFF
28	TARGHETTE ADESIVE	ADHESIFS	ADHESIVE	KLEBSTOFF
29	ALBERO CARDANICO	ARBRE A CARDAN	CARDAN SHAFT	KARDANWELLE
30	CARTER ASSALE ANTERIORE	CARTER ESSIEU AVANT	FRONT AXLE CASING	VORNACHSE GEHAUSE
31	CARTER ASSALE POSTERIORE	CARTER ESSIEU ARRIERE	REAR AXLE CASING	HINTER ACHSE GEHAUSE
32	RIDUZIONE EPICICLOIDALE ASSALE ANTERIORE	REDUCTEURS ESSIEU AVANT	FRONT AXLE REDUCTION GEAR	VORNACHSE REDUKTIONSGETRIEBE
33	RIDUZIONE EPICICLOIDALE ASSALE POSTERIORE	REDUCTEURS ESSIEU ARRIERE	REAR AXLE REDUCTION GEAR	HINTERACHSE REDUKTIONSGETRIEBE
34	DIFFERENZIALE-ASSALE ANTERIORE	DIFFERENTIEL-ESSIEU AVANT	FRONT AXLE-DIFFERENTIAL	VORNAXHSE-DIFFERENTIAL
35	DIFFERENZIALE-ASSALE POSTERIORE	DIFFERENTIEL-ESSIEU ARRIERE	REAR AXLE-DIFFERENTIAL	HINTERACHSE-DIFFERENTIAL
36	BARRA DI STERZO ASSALE ANTERIORE E POSTERIORE	SYSTEME DE DIRECTION ESSIEU AVANT-ESSIEU ARRIERE	FRONT AXLE-REAR AXLE STEERING SYSTEM	VORNACHSE-HINTERACHSE LENKSYSTEM
37	FRENO IDRAULICO NEGATIVO SU ASSALE ANTERIORE	FREIN HYDRAULIQUE NEGATIF-ESSIEU AVANT	HYDRAULIC NEGATIVE BRAKE-FRONT AXLE	NEGATIV HYDRAULIK BREMSE-VORDERACHSE
38	FRENO A DISCO IN BAGNO D'OLIO ASSALE POSTERIORE	FREIN A DISQUE A BAIN D'HUILE ESSIEU ARRIERE	OIL BATH DISC BRAKE REAR AXLE	OLBASCHEIBENBREMSE HINTERACHSE
39	RIDUTTORE DELLE VELOCITA'	BOITE DE VITESSE ET DE TRANSFERT	TRANSFERT AND GEAR BOX	RADER UND GETRIEBEKASTEN
40	POMPA IDROSTATICA A CILINDRATA VARIABILE	POMPE A CYLINDREE VARIABLE	VARIABLE DISPLACEMENT PUMP	VERSTELLPUMPE

I N D E X

TAVOLA - PLANCHE DRAWING - SEITE	DESCRIZIONE	DESIGNATION	DESCRIPTION	BEZEICHNUNG
41	PIASTRA DI RACCORDO CON LIMITATORE	PLAQUE DE RACCORDEMENT AVEC LIMITEUR	CONNECTION PLATE WITH RELIEF VALVE	ANSCHLUSSPLATTE MIT DRUCKBEGRENZUNGSVENTIL
42	POMPA A INGRANAGGI	POMPE A ENGRENAGE	GEAR PUMP	ZANHRADPUMPEN
43	REGOLAZIONE IDRAULICA	REGLAGE HYDRAULIQUE	HYDRAULIC CONTROL	HYDRAULISCHER VERSTELLUNG
44	ROTORE IDROSTATICO	ROTOR HYDROSTATIQUE	HYDROSTATIC ROTOR	HYDROSTATIK ROTOR
45	POMPA IDROSTATICA (Elettrovalvola)	POMPE HYDROSTATIQUE (Soupape electrique)	HYDROSTATIC PUMP (Solenoid valve)	HYDROSTATIK PUMPE (Elektricventil)
46	MOTORE IDROSTATICO A CILINDRATA VARIABILE	MOTEUR A CYLINDREE VARIABLE	VARIABLE DISPLACEMENT MOTOR	VERSTELLMOTOR
47	MOTORE (Monoblocco)	MOTEUR (Bloc cylindres)	ENGINE (Cylinder block)	MOTOR (Zylinderbloc)
48	MOTORE (Pistoni-bielle-albero a gomito)	MOTEUR (Pistons-bielles-vilebrequin)	ENGINE (Pistons-connecting rods-crankshaft)	MOTOR (Kolben-pleulstange-kurbelwelle)
49	MOTORE (Testata)	MOTEUR (Culasse)	ENGINE (Cylinder head)	MOTOR (Zylinder kopf)
50	MOTORE (Asse e bilancieri)	MOTEUR (Rampe des culbuteurs)	ENGINE (Rocker arm shaft)	MOTOR (Kipphebelwelle)
51	MOTORE (Ingranaggi e albero della distribuzione)	MOTEUR (Distribution et arbre a cames)	ENGINE (Timing gear and camshaft)	MOTOR (Steuergetriebe und nochenwelle)
52	MOTORE (Pompa lubrificazione e carcassa)	MOTEUR (Pompe a huile et clapet de decharge)	ENGINE (Lubricating oil pump and relief valve)	MOTOR (Schierolpumpe und entla stungsventil)
53	MOTORE (Equipaggiamento iniezione nafta)(Diesel)	MOTEUR (Equipment d'injection) (Diesel)	ENGINE (Fuel injection equipment) (Diesel)	MOTOR (Einspritzlage)(Diesel)
54	MOTORE (Pompa d'iniezione)	MOTEUR (Pompe d'injection)	ENGINE (Injection pump)	MOTOR (Einspritz pumpe)

INDEX

TAVOLA - PLANCHE DRAWING - SEITE	DESCRIZIONE	DESIGNATION	DESCRIPTION	BEZEICHNUNG
55	MOTORE (Iniettori)	MOTEUR (Injecteurs)	ENGINE (Injector)	MOTOR (Einspritz duse)
56	MOTORE (Kit pompa)	MOTEUR (Jeu pompe)	ENGINE (Kit pump)	MOTOR (Kit pump)
57	MOTORE (Carcassa volano e corona avviamento)	MOTEUR (Carter volant-moteur)	ENGINE (Flywheel housing)	MOTOR (Schwungradgehaeuse)
58	MOTORE (Motorino avviamento)	MOTEUR (Demarreur)	ENGINE (Starter motor)	MOTOR (Anlasser)
59	MOTORE (Cinghia motorino avviamento)	MOTEUR (Courroie demarreur)	ENGINE (Starter motor belt)	MOTOR (Riemen anlasser)
60	MOTORE (Coppa olio)	MOTEUR (Carter d'huile)	ENGINE (Lubricating oil sump)	MOTOR (Öl wanne)
61	MOTORE (Tappo riempimento e sfiato)	MOTEUR (Cache-culbeteurs et reniflard)	ENGINE (Rocker arm cover and breather)	MOTOR (Kipphebeldeckel und entlufterrohr)
62	MOTORE (Filtro olio e refrigeratore)	MOTEUR (Filtre a huile et refroidisseur d'huile)	ENGINE (Lubricating oil filter and integral)	MOTOR (Schmieroelfilter und motorseitiger oelkuhler)
63	MOTORE (Puleggia albero a gomito)	MOTEUR (Poulie de vilebrequn)	ENGINE (Crankshaft pulley)	MOTOR (Kurbelwelle riemenscheibe)
64	MOTORE (Pompa acqua, termostato e scambiatore di calore)	MOTEUR (Pompe a eau, thermostat echangeur de chaleur et refroid)	ENGINE (Water pump, thermostat and heat exchanger)	MOTOR (Wasserpumpe, thermostat und waermetanscher)
65	MOTORE (Entrata e uscita dell'acqua)	MOTEUR (Entree et sortie d'eau)	ENGINE (Water outlet and inlet)	MOTOR (Wasseraus und wassereinlass)
66	MOTORE (Alternatore)	MOTEUR (Alternateur)	ENGINE (Alternator)	MOTOR (Wechselstromgenerator)
67	MOTORE (Alternatore)	MOTEUR (Alternateur)	ENGINE (Alternator)	MOTOR (Wechselstromgenerator)
68	MOTORE (Presa di forza)	MOTEUR (Eintrainement par pignon des equipments auxiliares)	ENGINE (Gear drive auxiliary drive)	MOTOR (Zahnradangetriebene nebenaggregate-wahlweise)

I N D E X

TAVOLA - PLANCHE DRAWING - SEITE	DESCRIZIONE	DESIGNATION	DESCRIPTION	BEZEICHNUNG
69	MOTORE (Collettore d'aspirazione)	MOTEUR (Collecteur d'admission)	ENGINE (Intake manifold)	MOTOR (Ansaugleitung)
70	MOTORE (Collettore d'aspirazione)	MOTEUR (Collecteur d'admission)	ENGINE (Intake manifold)	MOTOR (Ansaugleitung)
71	MOTORE (Collettore di scarico)	MOTEUR (Collecteur echappement)	ENGINE (Exhaust manifold)	MOTOR (Auspuffkrummer)
72	MOTORE (Circuito combustibile)	MOTEUR (Circuit carburant)	ENGINE (Fuel system)	MOTOR (Kraftstoff-niederdruckanlage)
73	MOTORE (Circuito combustibile)	MOTEUR (Circuit carburant)	ENGINE (Fuel system)	MOTOR (Kraftstoff-niederdruckanlage)
74	MOTORE (Circuito combustibile)	MOTEUR (Circuit carburant)	ENGINE (Fuel system)	MOTOR (Kraftstoff-niederdruckanlage)
75	MOTORE (Avviamento a freddo)	MOTEUR (Dispositif depart a frold)	ENGINE (Cold start system)	MOTOR (Kaltstartanlage)
76	MOTORE (Sollevamento motore)	MOTEUR (Levage moteur)	ENGINE (Engine lifting)	MOTOR (Motorhebeoesen)
77	MOTORE (Comando avviamento e arresto)	MOTEUR (Controle acceleration et stop)	ENGINE (Throttle and stop controls)	MOTOR (Gas-und abstellheberl)
78	MOTORE (Montaggi (anter. e poster.))	MOTEUR (Supports (AV. et AR.))	ENGINE (Mountings (front and rear))	MOTOR (Motorenaufhaengungen (vorne und hinten)
79	MOTORE (Candeletta/interruttore d'avviamento)	MOTEUR (Contacteur chauffage/ demarrage)	ENGINE (Heater/starter switch)	MOTOR (Glueh/anlasschalter)
80	MOTORE (Manometro e interruttore pressione olio)	MOTEUR (Mano. contact pression d'huile et manometre)	ENGINE (Lub. oil pressure switch and gauge)	MOTOR (Oeldruckschalter und oeldruckmanometer)
81	MOTORE (Bulbo e manometro temperatura)	MOTEUR (Manometre temperature transmetteur)	ENGINE (Temperature gauge and sender)	MOTOR (Temperaturanzeiger und-geber)

I N D E X

TAVOLA - PLANCHE DRAWING - SEITE	DESCRIZIONE	DESIGNATION	DESCRIPTION	BEZEICHNUNG
81	MOTORE (Bulbo e manometro temperatura)	MOTEUR (Manometre temperature transmetteur)	ENGINE (Temperature gauge and sender)	MOTOR (Temperaturanzeiger und-geber)
82	MOTORE (Radiatore e coperchio)	MOTEUR (Radiateur et capotage)	ENGINE (Radiator and cowling)	MOTOR (Wasserkuehler und leitblech)
83	MOTORE (Pompa pre-filtro nafta)	MOTEUR (Circuit carburant avant la pompe d'alimentation)	ENGINE (Fuel pre-lift pump)	MOTOR (Kraftstoff-wasservorab--scheider)
84	MOTORE (Applicazioni varie)	MOTEUR (Appliacitions diverses et auxiliares)	ENGINE (Application miscellaneous and auxiliaries)	MOTOR (Geraetezubehoer und nebenaggregate)
85	MOTORE (Gruppo riparazione guarnizioni (Superiore))	MOTEUR (Jeu de joints-revision partie haute)	ENGINE (Joints and gaskets-top service kit)	MOTOR (Dichtsatz-zylinderkopf--montage)
86	MOTORE (Gruppo riparazione guarnizioni (Inferiore))	MOTEUR (Jeu de joints-revision partie basse)	ENGINE (Joints and gaskets-bottom service kit)	MOTOR (Dichtsatz-zylinderblok--montage)

RAFFRED.MOTORE,CIRCUITO COMBUSTIBILE,ASPIRAZ. E SCARICO
ADAPTATION MOTEUR -TRANSMISSION
ENGINE -TRANSMISSION ADAPTATION
MOTOR -GETRIEBE ANPASSUNG

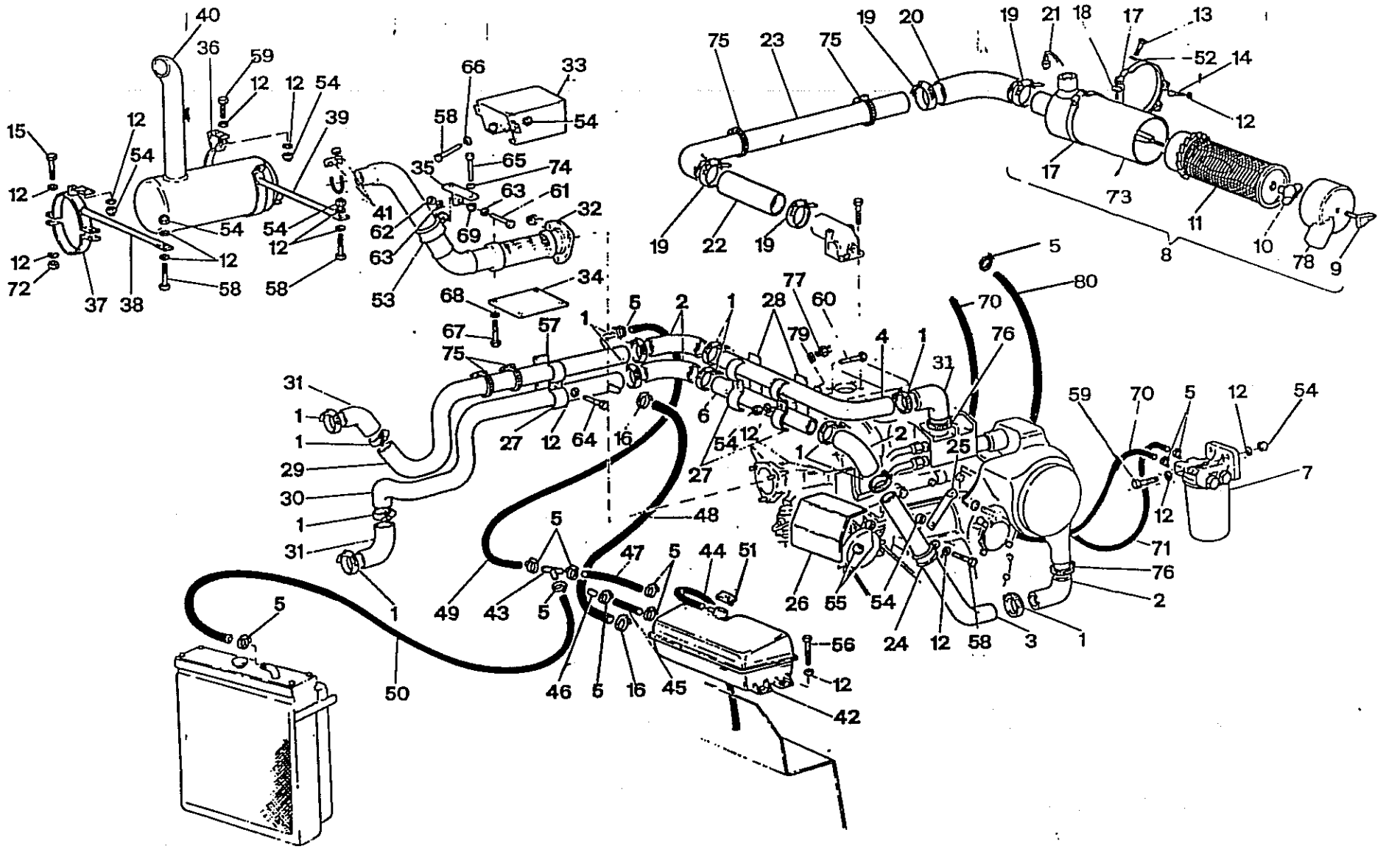

1/4

RAFFRED.MOTORE,CIRCUITO COMBUSTIBILE,ASPIRAZ. E SCARICO
ADAPTATION MOTEUR -TRANSMISSION
ENGINE -TRANSMISSION ADAPTATION
MOTOR -GETRIEBE ANPASSUNG

Rep Item	Part. Number	DESCRIZIONE	DESIGNATION	DESCRIPTION	BEZEICHNUNG	Quantità Quantity / Quantité Menge 2 — MVT 660
1	479159	fascetta	collier	clamp	schelle	12
2	488359	manicotto	manchon	sleeve	muffe	4
3	499254	tubo	tuyau	hose	schlauch	1
4	504078	tubo	tuyau	hose	schlauch	1
5	487909	fascetta	collier	clamp	schelle	14
6	499255	tubo	tuyau	hose	schlauch	1
7	473559	prefiltro	frefiltre	precleaner	vorfilter	1
8	499350	filtro aria completo	filtre air complet	complete air filter	komplett luftfilter	1
9	499939	vite	vis	screw	schraube	1
10	499936	dado ad alette	ecrou a papillon	wing nut	flugelmutter	1
11	455044	cartuccia	cartouche	cartridge	patrone	1
12	471360	rondella	rondelle	washer	unterlegscheibe	43
13	478639	vite	vis	screw	schraube	2
14	470388	vite	vis	screw	schraube	4
15	482869	vite	vis	screw	schraube	3
16	479093	fascetta	collier	clamp	schelle	2
17	499937	collare	collier	collar	stellring	2
18	471402	dado	ecrou	nut	mutter	2
19	470680	fascetta	collier	clamp	schelle	4
20	488009	manicotto	manchon	sleeve	muffe	1
21	499941	indicatore	indicateur	indicator	zeiger	1
22	499257	tubo	tuyau	hose	schlauch	1
23	499258	tubo	tuyau	hose	schlauch	1
24	513131	fascetta	collier	clamp	schelle	1
25	499259	staffa	etrier	bracket	buegel	1

2/4

RAFFRED.MOTORE,CIRCUITO COMBUSTIBILE,ASPIRAZ. E SCARICO
ADAPTATION MOTEUR -TRANSMISSION
ENGINE -TRANSMISSION ADAPTATION
MOTOR -GETRIEBE ANPASSUNG

Rep Item	Part. Number	DESCRIZIONE	DESIGNATION	DESCRIPTION	BEZEICHNUNG	Quantità Quantity / Quantité Menge / 2 — MVT 660
26	487796	carter	carter	housing	gehaeuse	1
27	486115	staffa	etrier	bracket	buegel	4
28	487823	piatto	plat	plate	teller	2
29	499261	tubo	tuyau	hose	schlauch	1
30	499260	tubo	tuyau	hose	schlauch	1
31	485627	manicotto	manchon	sleeve	muffe	3
32	488275	tubo	tuyau	hose	schlauch	1
33	488296	carter	carter	housing	gehaeuse	1
34	499262	lamiera	feuille	plate	blech	1
35	488461	staffa	etrier	bracket	buegel	1
36	508789	collare	collier	collar	stellring	1
37	508791	collare	collier	collar	stellring	1
38	508792	collare	collier	collar	stellring	1
39	508790	collare	collier	collar	stellring	1
40	505112	marmitta	pot d'echappement	exhaust muffler	auspuff	1
41	485831	fascetta	collier	clamp	schelle	1
42	488334	serbatoio	reservoir	reservoir	tank	1
43	499263	raccordo	raccord	pipe fitting	rohrverbindung	1
44	488361	tubo	tuyau	hose	schlauch	1
45	499252	tubo	tuyau	hose	schlauch	1
46	499253	tappo	bouchon	plug	stopfen	1
47	488364	tubo	tuyau	hose	schlauch	1
48	509884	tubo	tuyau	hose	schlauch	1
49	488363	tubo	tuyau	hose	schlauch	1
50	488360	tubo	tuyau	hose	schlauch	1

3/4

RAFFRED.MOTORE,CIRCUITO COMBUSTIBILE,ASPIRAZ. E SCARICO
ADAPTATION MOTEUR -TRANSMISSION
ENGINE -TRANSMISSION ADAPTATION
MOTOR -GETRIEBE ANPASSUNG

Rep Item	Part. Number	DESCRIZIONE	DESIGNATION	DESCRIPTION	BEZEICHNUNG	Quantità Quantity / Quantité Menge MVT 660	2
51	499265	tappo	bouchon	plug	stopfen	1	
52	455018	rondella	rondelle	washer	unterlegscheibe	2	
53	470096	fascetta	collier	clamp	schelle	1	
54	471320	dado	ecrou	nut	mutter	15	
55	479803	dado	ecrou	nut	mutter	2	
56	448677	vite	vis	screw	schraube	4	
57	499264	piatto	plat	plate	teller	2	
58	455271	vite	vis	screw	schraube	7	
59	471363	vite	vis	screw	schraube	8	
60	482869	vite	vis	screw	schraube	5	
61	484671	vite	vis	screw	schraube	1	
62	471325	dado	ecrou	nut	mutter	1	
63	448291	rondella	rondelle	washer	unterlegscheibe	2	
64	471358	vite	vis	screw	schraube	2	
65	471336	vite	vis	screw	schraube	2	
66	484100	rondella	rondelle	washer	unterlegscheibe	2	
67	455019	vite	vis	screw	schraube	4	
68	455018	rondella	rondelle	washer	unterlegscheibe	4	
69	455820	dado	ecrou	nut	mutter	2	
70	485935	tubo	tuyau	hose	schlauch	1	
71	485957	tubo	tuyau	hose	schlauch	1	
72	455185	dado	ecrou	nut	mutter	4	
73	499934	corpo filtro	corp du filtre	filter body	filtereinsatz	1	
74	471326	rondella	rondelle	washer	unterlegscheibe	4	
75	448302	fascetta	collier	clamp	schelle	10	

4/4

RAFFRED.MOTORE,CIRCUITO COMBUSTIBILE,ASPIRAZ. E SCARICO
ADAPTATION MOTEUR -TRANSMISSION
ENGINE -TRANSMISSION ADAPTATION
MOTOR -GETRIEBE ANPASSUNG

Rep Item	Part. Number	DESCRIZIONE	DESIGNATION	DESCRIPTION	BEZEICHNUNG	Quantità Quantity / Quantité Menge 2 — MVT 660
76	503629	fascetta	collier	clamp	schelle	2
77	504070	bulbo	boule	bulb	thermometerkugel	1
78	499938	coperchio	couvercle	cover	deckel	1
79	479026	rondella	rondelle	washer	unterlegscheibe	1
80	499291	tubo	tuyau	hose	schlauch	1

Manitou Mvt660 Part Catalog
Full download: http://manualplace.com/download/manitou-mvt660-part-catalog/

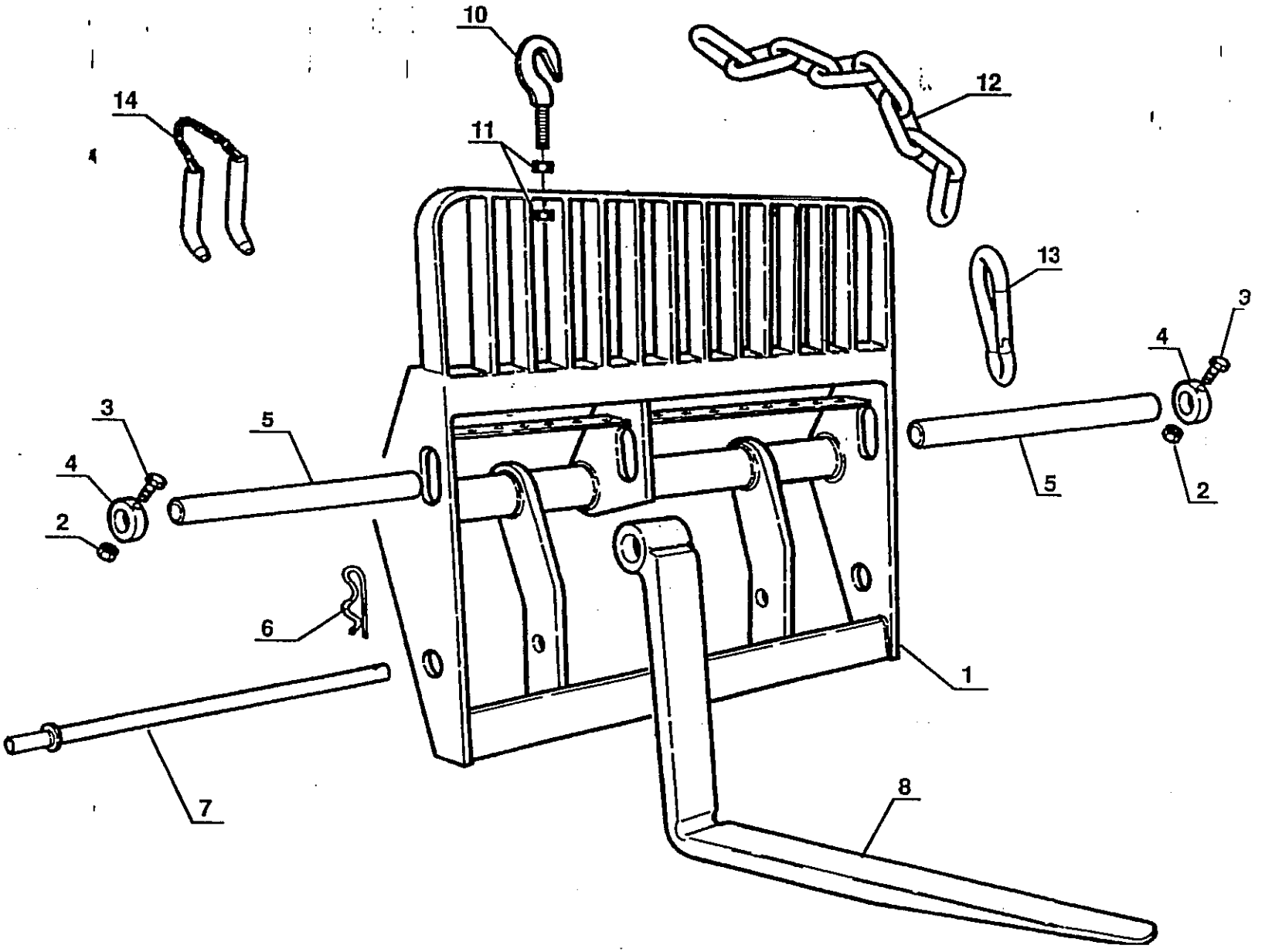

This is the cut pages sample. Download all 304 page(s) at: ManualPlace.com